dormakaba

CS 80 MAGNEO

Automatic sliding door operator

CS 80 MAGNEO –
An unrivalled automatic sliding door operator

Outstanding user convenience and unique driving behaviour excel the automatic sliding door operator CS 80 MAGNEO. Based on their solenoid technology, dormakaba realised an easy-to-handle operator system for all kinds of single-panel interior doors.

dormakaba's elegant Contur design is characteristic for the CS 80 MAGNEO. Thanks to its slender and linear construction in conjunction with two freely selectable design versions, CS 80 MAGNEO perfectly matches the overall architecture of the building to harmonise with further integrated dormakaba solutions – both in the private and the public sector.

Superior design
In order to meet the high aesthetic demands of interior design, CS 80 MAGNEO is available in two different and freely selectable surface finishes. In its standard version in anodised aluminium, the magnetic sliding door operator ensures visual unity with other products out of dormakaba's Automatic range.

As an alternative, users may choose a stainless steel version in matt finish. This stainless steel surface finish perfectly matches dormakaba Glass applications to create visual unity and a harmonious overall look.

Suddenly anything is possible
Thanks to the flexibility of this new system, the CS 80 MAGNEO opens up various fields of application – both in the private and the commercial sector. No matter if installed as interior door, as access door of a walk-in cupboard or as prestigious entrance door to anoffice or practice, the CS 80 MAGNEO is extremely versatile as it is suitable for in-wall or on-wall mounting and may be realised as left- or right-handed version. For professionals and competent laymen, this automatic sliding door operator is straightforward to install and easy to operate, making it a preferred application, especially as also existing door systems may be upgraded with the aid of the automatic CS 80 MAGNEO operator.

Safe – CS 80 MAGNEO
In Low-Energy-Mode, extra-sensitive driving characteristics respond immediately to any obstacle, thereby ensuring excellent protection as a rule. Additional safety sensors may not be required as the sliding door operator, if realised as Low-Energy application in accordance with DIN 18650 and EN 16005 (German Industrial Standard), ANSI (American Standard) and BSI (British Standard), may even be operated without sensors. When Full-Energy-Mode is activated at the operator, the CS 80 MAGNEO benefits from seamless integration in the dormakaba system. In this case, the CS 80 MAGNEO must be equipped with optional safety sensors from the dormakaba Automatic range of accessories.

Functions
No matter if you would like to open the door in a full-automatic way via motion detector, manually, via pushbutton or if you would like to adjust the door so that it is permanently open, the CS 80 MAGNEO already provides a large range of standard functions. It may be activated via push-button, radar motion detector, radio remote control, Push&Go, manually and adjusted to Permanent Open Function or Full-Energy-Mode (in Full-Energy Mode additional safety sensors are required).

Mounting
In many cases, mounting the CS 80 MAGNEO does not require any specialist knowledge. Comprehensive mounting and operating instructions mean that the mounting be performed by the glass, metal and timber worker or the competent layman.

Magnetic technology is silent – MAGNEO will give the proof

A technology is suitable for everyday business if you hardly notice it: thanks to its almost noiseless and reliable function.

The CS 80 MAGNEO is driven by the magnetic and thus contactless shear wave of a linear DC motor – a movement that perfectly matches the movement of a sliding door.

The functional principle of the CS 80 MAGNEO is simple: Its silent operating behaviour makes the system especially suitable for areas where a low noise level is required: Everywhere.

The functional principle of MAGNEO

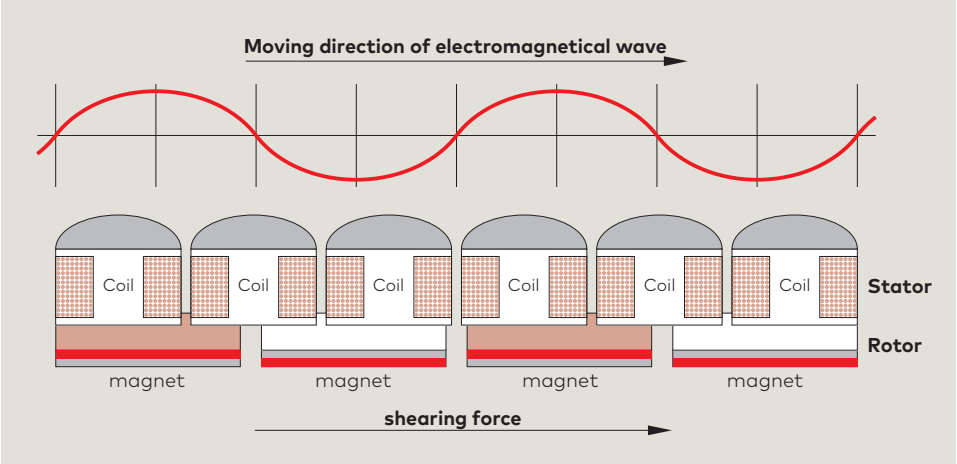

CS 80 MAGNEO – Our modular system appears to be that simple. It is!

CS 80 MAGNEO is a modular system consisting of door kits, cover and fixings kits, the CS 80 MAGNEO operator and accessories.

The system allows virtually any door to be configured as an automatic sliding door. The overview right illustrates which system components are required.

The respective door kits contain all components that are required to mount the CS 80 MAGNEO operator onto the door panel for the prevailing way of mounting.

You will require an additional cover and fixing set if you want to mount the CS 80 MAGNEO operator on the wall.

The CS 80 MAGNEO operator is the basis for any application. It is available in three lengths in order to cover different door widths.

Wooden door / frame door (on-wall)

Glass door / glass clamping rail (on-wall)

Glass door / glass clamping rail (on-wall)

Glass door / MANET single-point fixings (on-wall)

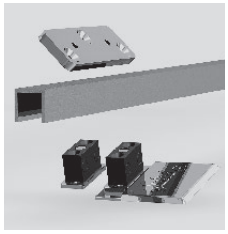

Door kit for wooden door panel

Door kit glass clamping rail

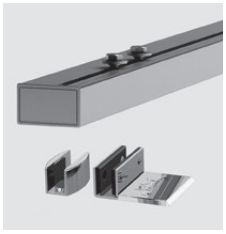

Door kit glass clamping rail

Door kit MANET

+ + +

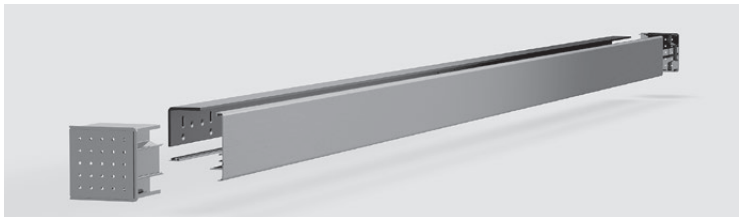

Cover and fixing kit for wooden door panels and glass clamping rails

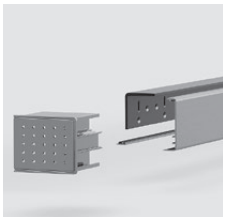

Cover and fixing kit for MANET

+ +

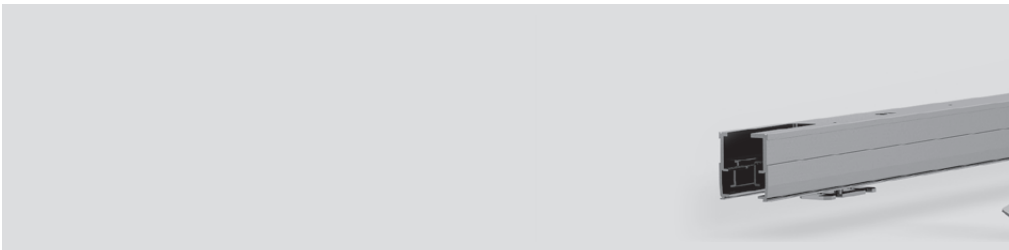

CS 80 MAGNEO operator incl. set for in-wall mounting

You may choose the CS 80 MAGNEO in two different surface finishes:

- Standard version in anodised aluminium (E6/CO):
  To match automatic dormakaba access systems in different designs
- Version in matt stainless steel design:
  To meet other designs out of the dormakaba Glass product range

Glass door / MANET single-point fixings[1]
(on glass wall)

Door kit MANET

+

Glass fixing system

+

Wooden door / frame door
(in-wall)

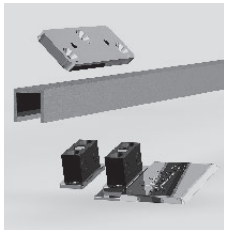

Door kit for wooden door panel

+

Glass door / glass clamping rail
(in-wall)

Door kit glass clamping rail

+

Glass door / glass clamping rail
(in-wall)

NEW

Door kit glass clamping rail

+

Glass door / MANET single-point fixings[2]
(in-wall)

Door kit MANET

+

[1] Planning and mounting by a specialist firm only
[2] This application does not comply with European Union standards. There is a risk of injury in the panel-suspension area.

Ways of mounting
- In-wall mounting
- On-wall mounting

Passage widths
From 650 to 1,060 mm.
The CS 80 MAGNEO operator, the fixing kit and cover kit as well as the glass clamping rail kit are available in three different lengths.

Available door panel versions
- Full-glass doors
- Framed glass doors
- Wooden doors (solid-leaf construction)
- Metal doors
- For door panel weights from 20 to 80 kg

The door panel must be ordered separately.

Activation of opening/closing cycle
- Full-automatic via motion detector
- Via touch (Push&Go)
- Pushbutton
- Hand-held transmitter
- Locking device

Self-service provides high comfort

The CS 80 MAGNEO is easy to handle. This automatic sliding door operator offers all important standard functions and various special functions for your convenience.

User comfort that will open doors for you: either in a full automatic way via motion detector, pushbutton (either with cable or wireless), radio remote control or with the aid of our smooth Push&Go Function. No matter how you open the door – all functions are freely selectable: the hold-open time, Permanent Open and automatic closing.

Very simple and simply beautiful!

Series functions as standard

Push&Go
The door opens as soon as the door is slightly pushed in opening direction by hand and closes automatically on expiry of the individually adjustable hold-open time.

Manual access
Although the CS 80 MAGNEO is a full-automatic operator, it may effortlessly be opened and closed manually in the event of a power failure.

“SoftMotion“ safety
The system is delivered in Low-Energy-Mode as standard so that the door will stop and reverse automatically on the slightest contact.

Plenty of accessories for those who want even more

Pushbutton
The CS 80 MAGNEO is activated via pushbutton. The sliding door will close automatically as soon as the user has passed the door system.

Radio remote control
A CS 80 MAGNEO operator with a BRC radio remote system may be opened and closed with the aid of a BRC-H radio remote control.

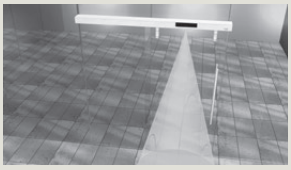

Motion detector
A motion detector is suitable to open the CS 80 MAGNEO in a full-automatic way.

Program switch
You may comfortably switch between the different operation modes (Automatic, Permanent Open and manual operation) with the aid of the internal program switch or the wall-mounted EPS-S3 program switch.

A folding rule is enough to plan the system

Operator length and driving path

The length of the CS 80 MAGNEO operator depends on the length of the door's driving path (F) – which describes the distance the door has to cover for its opening or closing cycle. The respective formula is blindingly easy:

Passage width DB
+ Door panel projection AB
= Driving path F

Available lengths LV 1-3

We offer the CS 80 MAGNEO in three different lengths:

LV1 for driving paths F of up to 875 mm,

LV2 for driving paths F of up to 1,000 mm,

LV3 for driving paths F of up to 1,125 mm.

AB = door panel projection

The door panel projection is freely selectable. It may however not exceed 65 mm and is calculated with the aid of the passage width DB and the door panel width B:
(Door width B - DB) / 2 = AB

Place requirement for operator including cover + end caps

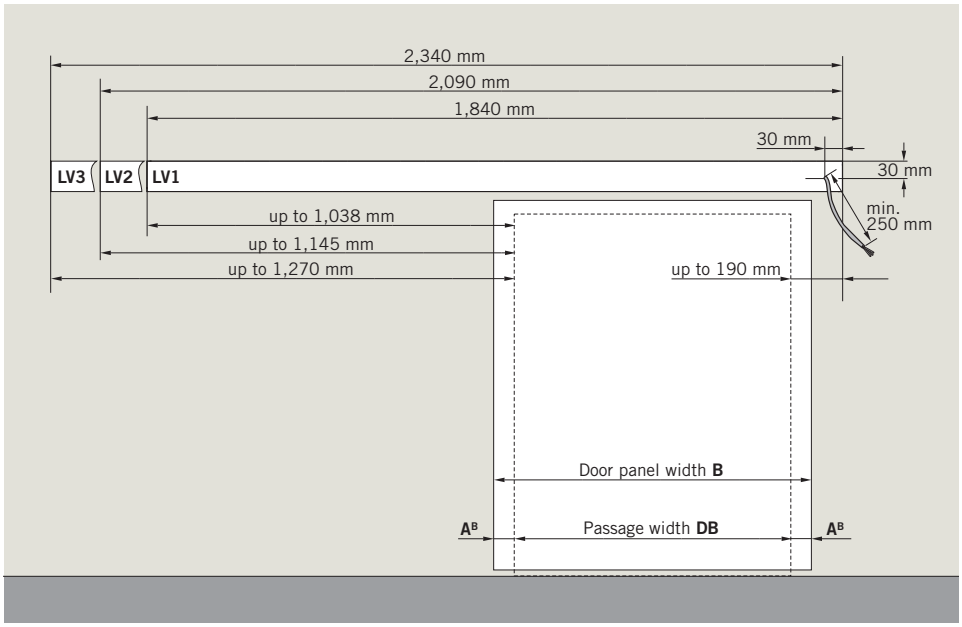

The sliding door on the drawing opens to the left side, thus the power supply is connected on the right side of the door (mains connection 3 x 1.5 mm²). The power supply of door systems opening to the right thus has to be realised on the left side of the operator.

Please have a look at our CS 80 MAGNEO planning aid leaflet for further assistance during the planning your door system. If you are interested in this leaflet please contact your dormakaba specialist dealer or visit us on the internet www.dormakaba.com

Reach your target with the proper dimensions

On-wall mounting

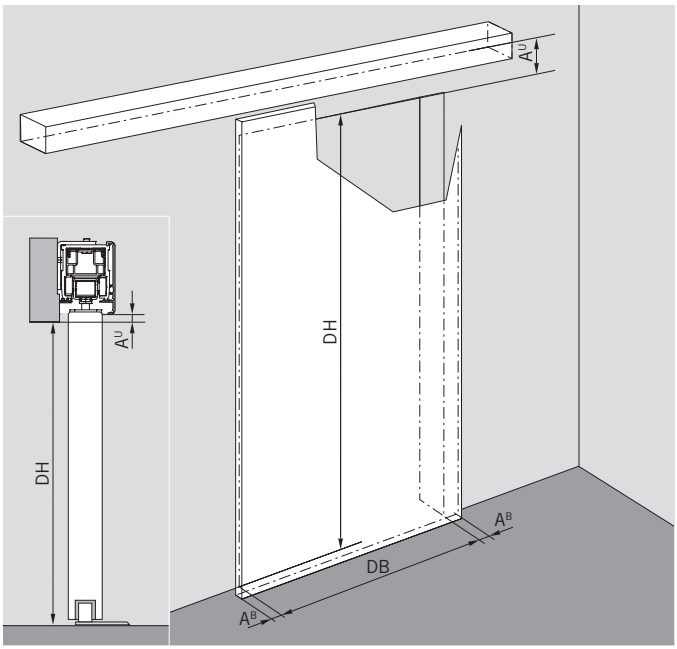

In-wall mounting

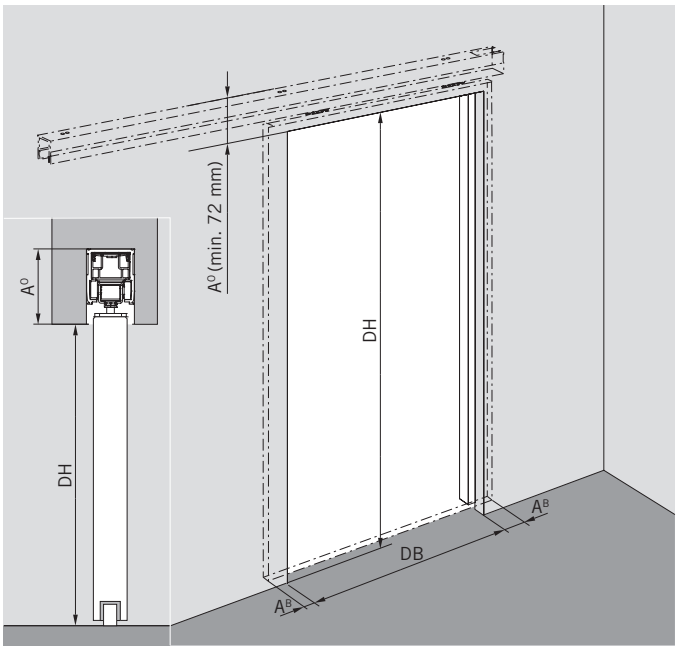

Power supply

The opening direction of the sliding door determines where the power supply (mains connection) is connected at the CS 80 MAGNEO.
The cable that comes out of the wall should at least be 250 mm long. See drawing at bottom of page 8.

A^U = Bottom edge of operator

A^U describes the distance between the bottom edge of the CS 80 MAGNEO operator and the passage.

You may select the dimension according to your requirements and will require it when planning your CS 80 MAGNEO as an on-wall mounted version.

DH & DB

The passage height DH and the passage width DB have to be determined when planning an automatic CS 80 MAGNEO sliding door system.

A^O = Upper edge of operator

A^O describes the distance between the upper edge of the operator and the passage. You may select the dimension according to your requirements and will require it when planning your CS 80 MAGNEO as an in-wall mounted version.

CS 80 MAGNEO systems with door frame or baseboard projection (AW-dimension)

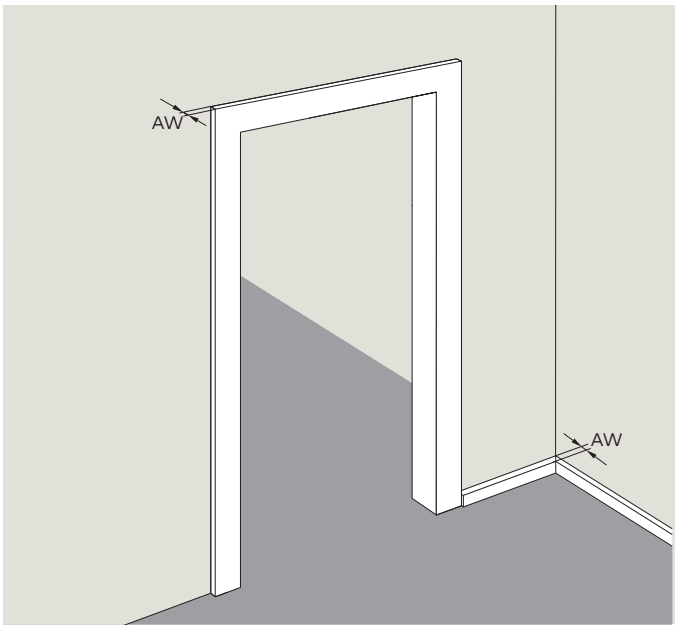

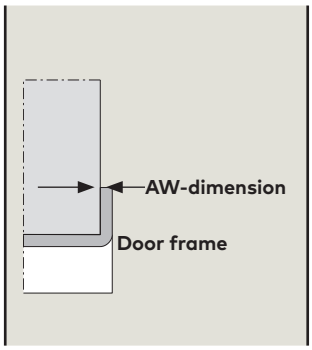

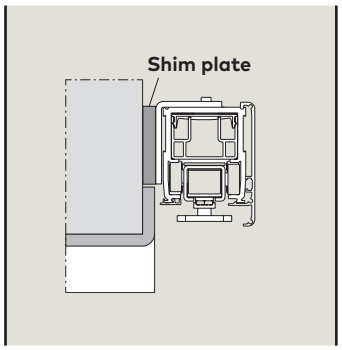

Is there a door frame or baseboard? If so, how big is the projection of the frame/baseboard with regard to the surface of the wall (AW) at its biggest point? In case the AW-dimension (projection) is bigger than 3 mm, you will have to shim the CS 80 MAGNEO operator. dormakaba offers a special shim plate for this purpose.
In case the AW-dimension (projection) is bigger than 15 mm, the operator additionally has to be shimmed by others.

That's all you need – Required installation dimensions

When planning an automatic CS 80 MAGNEO door system, you may for example start with the door panel in order to create a smooth look with regard to the passage or to use an existing door panel.

It is often reasonable to concentrate the planning on the fixing points of the operator as the fixing options provided by others are limited.

Please have a look at our CS 80 MAGNEO planning aid leaflet for further assistance during the planning your door system. If you are interested in this leaflet please contact your dormakaba specialist dealer or visit us on the internet www.dormakaba.com

Wooden door / frame door
(on-wall)

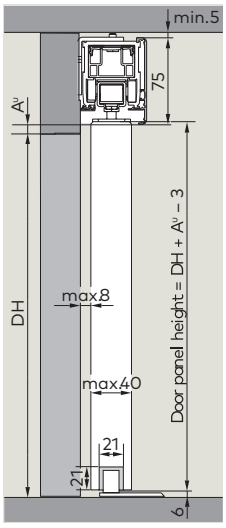

Glass door / glass clamping rail
(on-wall)

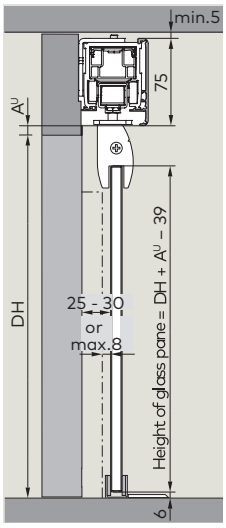

Glass door / glass clamping rail
(on-wall)

NEW

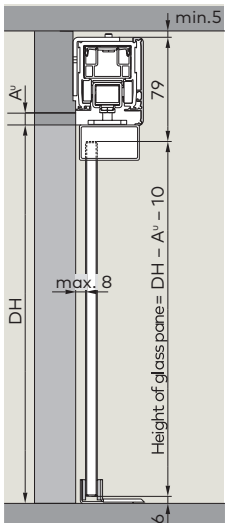

Glass door / MANET single-point fixings
(on-wall)

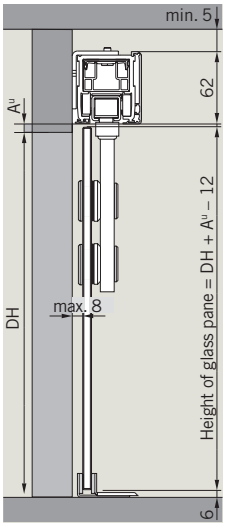

Glaziers and joiners should keep these dimensions in mind

How to order the door panel

The door panel is not a system component of the CS 80 MAGNEO modular system, you may place your order with a glazier or joiner.

Door panel width is freely selectable between 780 mm and 1,190 mm. The door panel projection (A^B) must however not exceed 65 mm. (See page 8)
Door panel height is freely selectable (max. 3,000 mm) and calculated with the aid of the mounting height of the operator.
Glass door panels have to be made of safety glass and all glass edges have to be rounded off.
Door panel weight may amount to between 20 and 80 kg.
Wooden door panels and glass doors with MANET single-point fixings must be provided with drill holes and recesses before the system is mounted. The required **C-dimension** results from the prevailing length version (LV) of the operator:

- **LV 1:** C = 575 mm
- **LV 2:** C = 700 mm
- **LV 3:** C = 825 mm

Preparation of wooden door panel

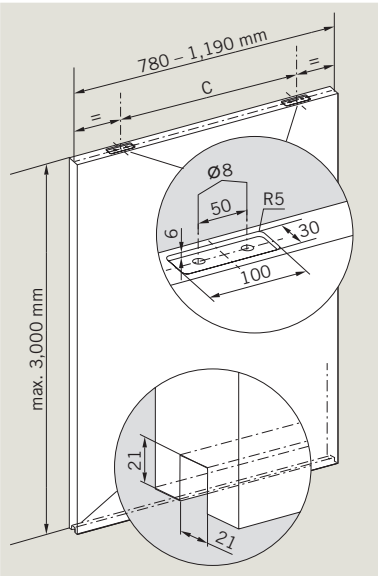

Glass door panel with glass clamping rail

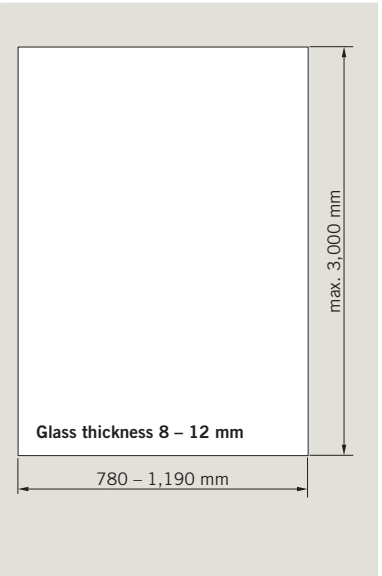

Glass door / MANET single-point fixings[1)]
(on glass wall)

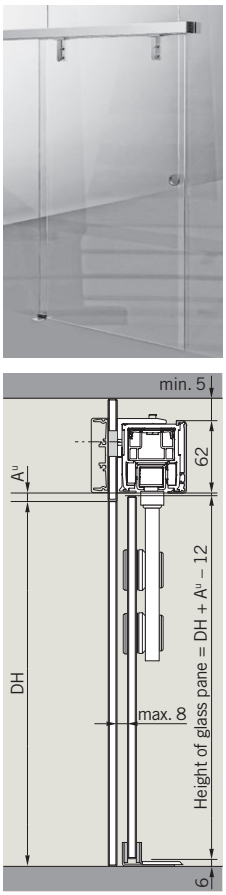

Wooden door / frame door
(in-wall)

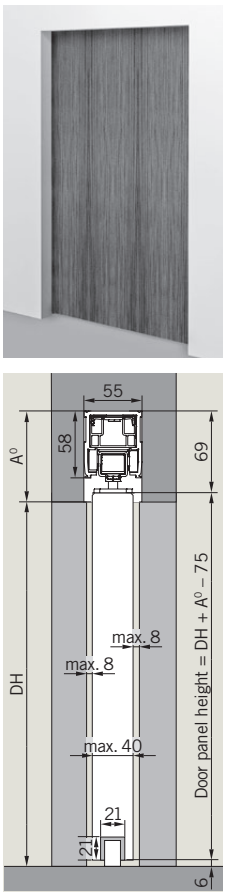

Glass door / glass clamping rail
(in-wall)

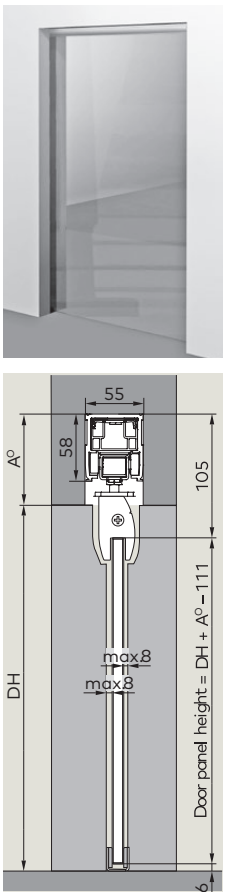

Glass door / glass clamping rail
(in-wall)

NEW

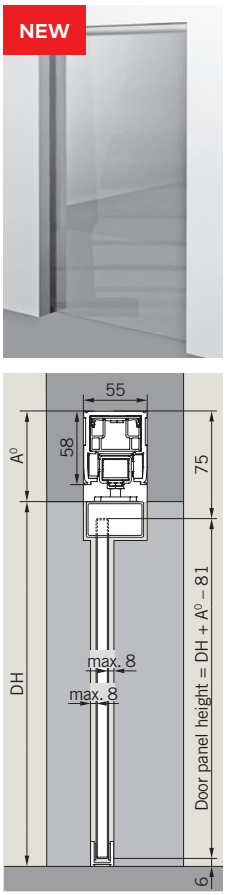

Glass door / MANET single-point fixings[2)]
(in-wall)

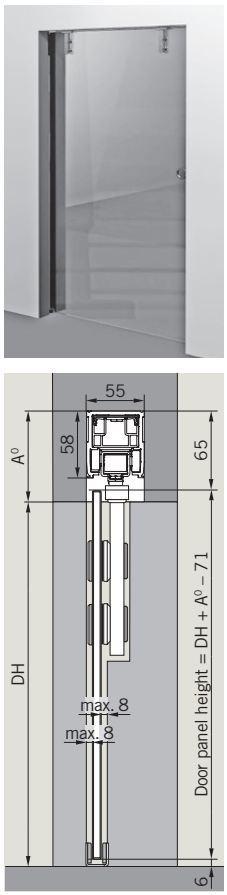

[1)] The system may only be planned and mounted by a properly qualified person. Please also have a look at the CS 80 MAGNEO leaflet for systems with glass fixings.
[2)] This application does not comply with European Union standards. There is a risk of injury in the panel-suspension area.

Preparation of MANET glass door panel

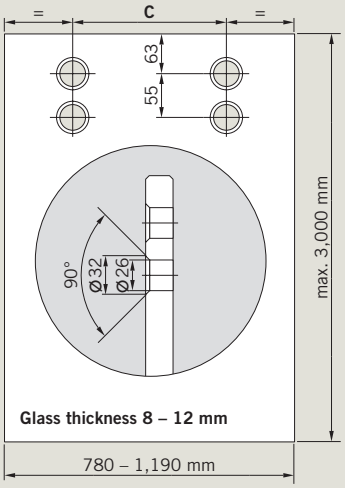

Preparation of optional recessed door grip

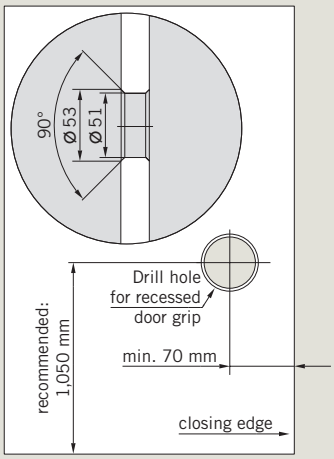

Hints regarding in-wall mounting

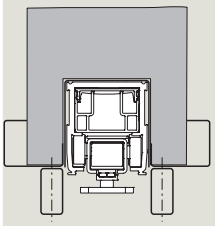

We would recommend covering the door panel connection at the CS 80 MAGNEO operator with profiles so that you will be able to access the operator easily even after the wall has been closed.

Furthermore you may use a special door frame by company **BOS**. Please contact the manufacturer for further details:

BOS Phone number:
+49 2572 203-0

Internet:
www.BestOfSteel.de/en

Which system components do you require?

		Wooden door / frame door (on-wall)			**Glass door / glass clamping rail** (on-wall)			**Glass door / glass clamping rail** (on-wall)			**Glass door / MANET single-point fixings** (on-wall)		
								NEW					
		LV 1	LV 2	LV 3	LV 1	LV 2	LV 3	LV 1	LV 2	LV 3	LV 1	LV 2	LV 3
A.	Door kits	84000071			8400007-3	-4	-5						
	E6/C0							840000-79	-80	-81	84000077		
	Matt stainless steel design							840000-82	-83	-84	84000078		
B.	Cover and fixing kit												
	E6/C0	8400005-1	-2	-3	8400005-1	-2	-3	8400005-1	-2	-3	8400006-1	-2	-3
	Matt stainless steel design	8400005-4	-5	-6	8400005-4	-5	-6	8400005-4	-5	-6	8400006-4	-5	-6
	Optional shim plate if AW (projection) = 3 to 15 mm	8402012-4	-5	-6	8402012-4	-5	-6	8402012-4	-5	-6	8402012-4	-5	-6
C.	CS 80 MAGNEO operator	8401000-1	-2	-3	8401000-1	-2	-3	8401000-1	-2	-3	8401000-1	-2	-3

The CS 80 MAGNEO is a modular system.

Combine your system components based on your installation requirements: CS 80 MAGNEO operator plus door kit and in case of on-wall mounting: plus cover kit and fixing kit. For some system components you must select the correct length version LV1 – LV3. The table shows which system compo-nents and kits are required for each way of mounting. Please note the article numbers in the ordering guide below.

The CS 80 MAGNEO operator, the fixing kit and cover kit as well as the door kit with glass clamping rail are available in three different lengths. The required length is determined via the driving path.

LV1 for driving paths F of up to 875 mm

LV2 for driving paths F of up to 1,000 mm

LV3 for driving paths F of up to 1,125 mm

Driving path F = passage width DB + door panel projection A^B

DB =

AB =

F =

☐ LV1 ☐ LV2 ☐ LV3

Driving path: on-wall mounting

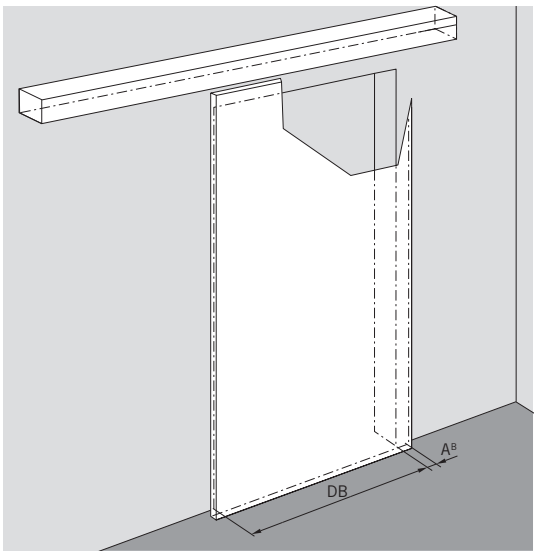

Please have a look at our CS 80 MAGNEO planning aid leaflet for further assistance during the planning your door system. If you are interested in this leaflet please contact your dormakaba specialist dealer or visit us on the internet www.dormakaba.com

Glass door / MANET single-point fixings[1]
(on glass wall)

LV 1	LV 2	LV 3
84000077		
84000078		
8400006-1	-2	-3
8400006-4	-5	-6
8402000-6	-7	
8401000-1	-2	-3

Wooden door / frame door
(in-wall)

LV 1	LV 2	LV 3
84000071		
8401000-1	-2	-3

Glass door / glass clamping rail
(in-wall)

LV 1	LV 2	LV 3
8400007-3	-4	-5
8400005-1	-2	-3
8400005-4	-5	-6
8402012-4	-5	-6
8401000-1	-2	-3

Glass door / glass clamping rail
(in-wall)

LV 1	LV 2	LV 3
840000-79	-80	-81
840000-82	-83	-84
8401000-1	-2	-3

Glass door / MANET single-point fixings[2]
(in-wall)

LV 1	LV 2	LV 3
84000077		
84000078		
8401000-1	-2	-3

[1] The system may only be planned and mounted by a properly qualified person. Please also have a look at the CS 80 MAGNEO leaflet for systems with glass fixings.
[2] This application does not comply with European Union standards. There is a risk of injury in the panel-suspension area.

Driving path: in-wall mounting

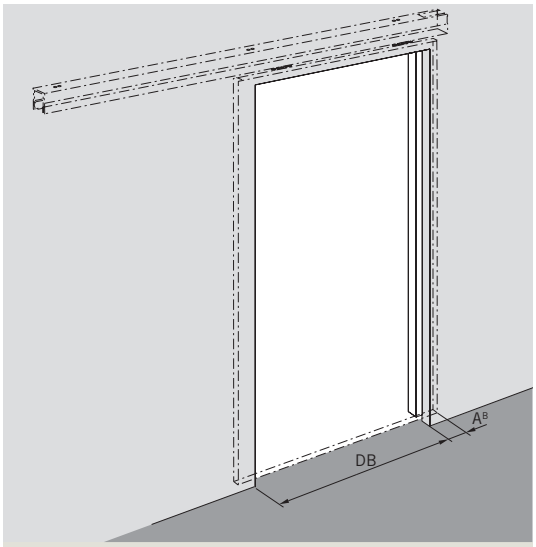

Determining the maximum AW-dimension (projection)

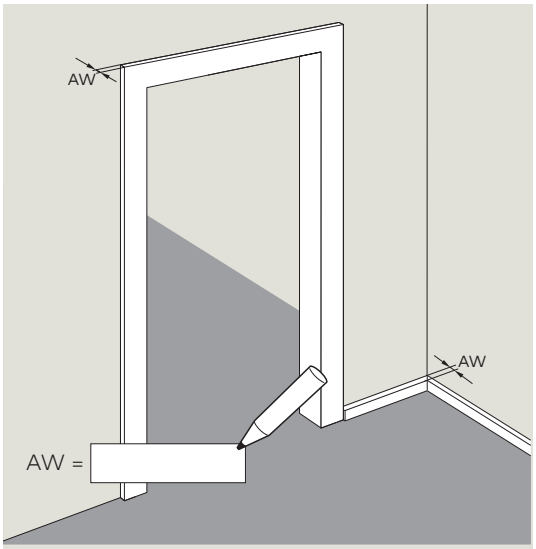

CS 80 MAGNEO: Risk for the facility operator and risk assessment
The risk of crushing, shearing, hitting and drawingin may not be excluded at automatic doors. When the system is delivered (in Low-Energy-Mode), the CS 80 MAGNEO meets the requirements of DIN 18650 and EN 16005. By complying with the provisions, such as reduced driving speeds and contact forces, the system generally provides a high safety standard so that sensors are not required as a rule. At the discretion of the operator or installer and depending on the spatial conditions and the persons using the door, it may be advisable to use safety sensors even when the system is operated in Low-Energy-Mode, for instance if being used by children or older persons. For this purpose, a risk assessment must be carried out by a specialist firm when the door system is being planned and commissioned. It is at the operator's discretion whether or not a safety device is actually installed. In Full-Energy-Mode the use of additional safety sensors is obligatory.

Ordering guide – Almost ready – Your CS 80 MAGNEO

Please enter the article numbers from the adjacent table.

1. What kind of door would you like to install?

A. Which door kit do you need?

B. Would you like to mount the CS 80 MAGNEO onto the wall? If so, you will require a cover and fixing kit. Which one?

Is the passage area equipped with a door frame and/or are there any baseboards? Is the AW-dimension bigger than 3 mm? If so, you will need a shim plate.

C. Which length versions LV of the CS 80 MAGNEO operator do you require?

2. What kind of power supply would you prefer?

Direct power supply (flush-mounted) — Standard equipment ☒

Via 230 V mains cable (please enter the article number from the page 15) ☐

3. How would you like to open and close the door?

Automatic activation (opening) as soon as the door panel is pushed by hand (Push&Go) — Standard equipment ☒

Magic Switch, radar switch responds to movement — White 5076831332 ☐

Recessed door grip for door panel (recommended with Push&Go Function) — Stainless steel 84020100 ☐; E6/C0 84020101 ☐; Matt stainless steel design 84020102 ☐

Automatic activation (opening) via pushbutton (flush-mounted version, white) — 19144701170 ☐

Automatic activation (opening) via Prosecure Opti motion detector — Black 86111000 ☐; Silver-coloured 86112000 ☐; White 86113000 ☐

Additional sensor fixing set (always order 1 set for motion detectors) — 84020030 ☐

Automatic opening via radio control — Receiver 29302002 ☐; Hand-held transmitter 29301004 ☐; Radio switch (wall-mounted) 29301005 ☐

Additional set of radio switches (always order 1 set for radio systems) — 84020081 ☐

4. How would you like to adjust the function programs (Off, Automatic, Permanent Open)?

Adjustment of function programs via internal program switch (located at end cap) — 16610601175 ☐

Adjustment of function programs via external program switch (EPS-S3, wall-mounted) — 16605501150 ☐

Adjustment of "Permanent Open Function" via double-click on activator (not possible with motion detector) — Standard equipment ☒

5. Do you require safety or presence sensors to safeguard the closing edges?

The limited driving speeds and the low contact force provide a high safety standard when the system is operated in the standard "Low-Energy-Mode" (system status of CS 80 MAGNEO on delivery). A risk assessment must be carried out during planning and commissioning to determine whether the use of additional sensors is required. The installation of additional sensors is optional and lies in the discretion of the facility operator. If the CS 80 MAGNEO is operated in extended "Full-Energy-Mode", the closing edges have to be additionally protected. The respective safety equipment has to be installed by a specialist for automatic door systems.

Prosecure Opti Combi 1 (motion detector & closing edge protection) — Black 86711401 ☐

Prosecure Opti Scan 1 (closing edge protection) — Black 86301101 ☐

Additional sensor fixing set (order one set per sensor) — 84020030 ☐

6. With locking device — 84020130 ☐

For queries and orders relating to CS 80 MAGNEO system components, please contact:

Four steps to create your door system.
Then everything will work automatically.

1. Measuring

Measure the passage and the required dimensions on site. Please consider the CS 80 MAGNEO planning aid leaflet to determine all important dimensions. If you are interested in this leaflet, please contact your dormakaba specialist dealer or visit us on the internet: www.dormakaba.com.

2. Planning

Please determine the size of the planned door panel/door, the required length version LV and the position of the CS 80 MAGNEO. The information on pages 8 to 11 in this brochure will help you.

3. Select system components

The CS 80 MAGNEO is a modular system. The table on pages 12-13 indicates the required system components for all ways of mounting. Please enter the article numbers on the form on the back of this paper.

4. Order system components and door panels

Place an order for the desired CS 80 MAGNEO components with your authorised dormakaba dealer. Please contact the glazier or joiner of you choice to order the suitable door panel. The technical specifications for the door panel on pages 10 and 11 will help you during the placement of your order.

Technical specifications

Operator length	without cover	with cover
Length version LV1	1,750 mm	1,840 mm
Length version LV2	2,000 mm	2,090 mm
Length version LV3	2,250 mm	2,340 mm
Operator height		
With MANET single-point fixings		62 mm
With glass clamping rail		75 mm
With wooden door panel		75 mm
Overall depth		
On-wall mounting (ohne Futterplatte)		60 mm
In-wall mounting (nur operatorsprofil)		50 mm
Operator weight		
Length version LV1		8.6 kg
Length version LV2		9.4 kg
Length version LV3		10.2 kg
Speed		0.2 – 0.6 m/s
The speed is calculated with the aid of the driving path and the door panel weight. During the commissioning, the system will adjust automatically in accordance with the prevailing standards and regulations.		
Power supply		220–230 V AC ± 10% 50/60 Hz
Fuse protection, by others		10 A
Power consumption		
Stand-by-mode		3.7 W
Automatic Function		max. 60 W
Class of protection		IP 20
Temperature range		0 – 40 °C
Required operating conditions		
Only suitable for dry environments		Relative humidity max. 93 % non-condensing
Operating noise		max. 55 db (A)
Measured at test setup. The noise level depends on the door and the prevailing substructure.		
Low-Energy-Mode		●
Full-Energy-Mode with safety sensor		O
Compliant with DIN 18650 and EN 16005, ANSI, BSI		●
Manufactured to ISO 9001		●

Connectable accessory

Pushbutton, radio remote control and radio switch	●
Motion detector	●
External program switches	●
Safety sensors for main and secondary closing edge	●

● = yes O = optional

dormakaba system components of the modular system	**Order No.**
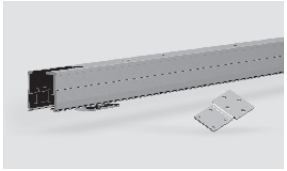	**CS 80 MAGNEO operator** incl. set for in-wall mounting **LV1** 84010001 **LV2** 84010002 **LV3** 84010003 USA-version with UL-approval **LV1** 84010004 **LV2** 84010005 **LV3** 84010006
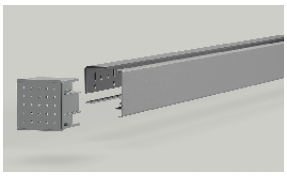	**Cover and fixings kit for wooden door panels and glass clamping rail** E6/CO **LV1** 84000051 **LV2** 84000052 **LV3** 84000053 Matt stainless steel design **LV1** 84000054 **LV2** 84000055 **LV3** 84000056
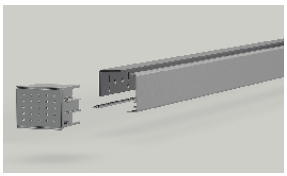	**Cover and fixings kit for MANET** E6/CO **LV1** 84000061 **LV2** 84000062 **LV3** 84000063 Matt stainless steel design **LV1** 84000064 **LV2** 84000065 **LV3** 84000066
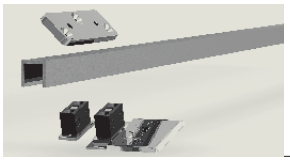	**Door kit for wooden door panel** incl. floor guides 84000071
	MANET door kit incl. floor guides E6/CO 84000078 Matt stainless steel design 84000077
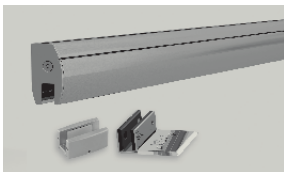	**Door kit glass clamping rail** incl. floor guides E6/C0 **LV1** 84000073 **LV2** 84000074 **LV3** 84000075 Aluminium profil, mill-finish **LV3** 84000076
NEW	**Door kit glass clamping rail** incl. floor guides E6/C0 **LV1** 84000079 **LV2** 84000080 **LV3** 84000081 Matt stainless steel design **LV1** 84000082 **LV2** 84000083 **LV3** 84000084 Aluminium profil, mill-finish **LV3** 84000085
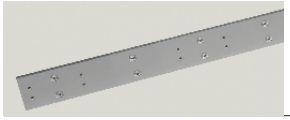	Shim plate **LV1** 84020124 **LV2** 84020125 **LV3** 84020126
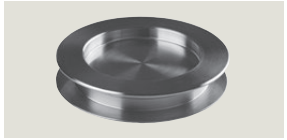	**Recessed door grip for wooden or glass doors** Stainless steel 84020100 E6/CO 84020101 Matt stainless steel design 84020102

Profiles in stock lengths 6,250 mm	Order No.
Mounting profile for glass-fixing system	Mill-finish 34002701120 E6/C0 34002702120 Matt stainless steel design 34002703120
Fixing profile for glass-fixing system	34002801120
Cover profile for glass-fixing system	Mill-finish 34002901120 E6/C0 34002902120 Matt stainless steel design 34002903120
Internal cover 75 mm	Mill-finish 34003003120 E6/C0 34003002120 Matt stainless steel design 34003004120
Internal cover 62 mm	Mill-finish 34003103120 E6/C0 34003102120 Matt stainless steel design 34003104120
Distance profile	34003401120
Operator profile	34002502120

Accessories: Operator and door panel	Order No.
Set for in-wall mounting	84020002
Set for on-wall mounting	**LV1** 84020003 **LV2** 84020004 **LV3** 84020005
Set for on-wall mounting (for glass walls)	E6/C0 84020006 Matt stainless steel design 84020007
Mains cable for	
Germany 230 V	84020040
UK 230 V	84020041
USA 115 V	84020042
Italy 230 V	84020043
Denmark 230 V	84020044
Switzerland 230 V	84020045
Australia 230 V	84020046
South-Africa 230 V	84020047
End caps	
Height 62 mm	Mill-finish 84020070 E6/C0 84020071 Matt stainless steel design 84020072
Height 75mm	Mill-finish 84020073 E6/C0 84020074 Matt stainless steel design 84020075
Cover profile set for wall connection	84020090
Guide rail for wooden door panels 1,125 mm	84020112
Floor guide for in-wall mounting	
For wooden door panels	84020123
For glass door panels	8073600099
CS 80 MAGNEO locking device	84020130
Floor guide on metal sheet (frame)	92212001
External floor guide rail (glass)	33438001150

Pushbuttons and program switches	Order No.
	Pushbutton, flush-mounted design, white **System 55** 19144701170
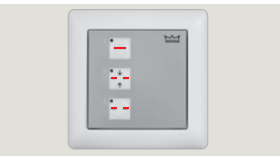	**Program switch EPS-S3** 16605501150 **Internal program switch** (no picture) 16610601175

Comfort switch with BRC radio technology	Order No.
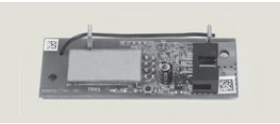	**BRC-R receiver** 29302002
Additional set of radio switches (always required for radio systems, no picture)	84020081
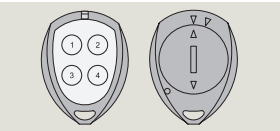	**BRC-H handheld transmitter** 29301004
	BRC-W large-surface pushbutton 29301005

Active infrared detectors	Order No.
	Prosecure Opti Scan Black 86301100 Silver coloured 86302100 White 86303100 **Prosecure Opti Scan 1** Black 86301101 Silver coloured 86302101 White 86303101
	Prosecure Opti Combi Black 86711400 Silver coloured 86712400 White 86713400 **Prosecure Opti Combi 1** Black 86711401 Silver coloured 86712401 White 86713401

WN 053 452 51532, 01/17, CS80 MAGNEO, GB, x. XX. xx/14
Subject to change without notice

CE

www.dormakaba.com

dormakaba Deutschland GmbH
DORMA Platz 1
58256 ENNEPETAL
Germany
T: +49 2333 793-0
F: +49 2333 793-4950